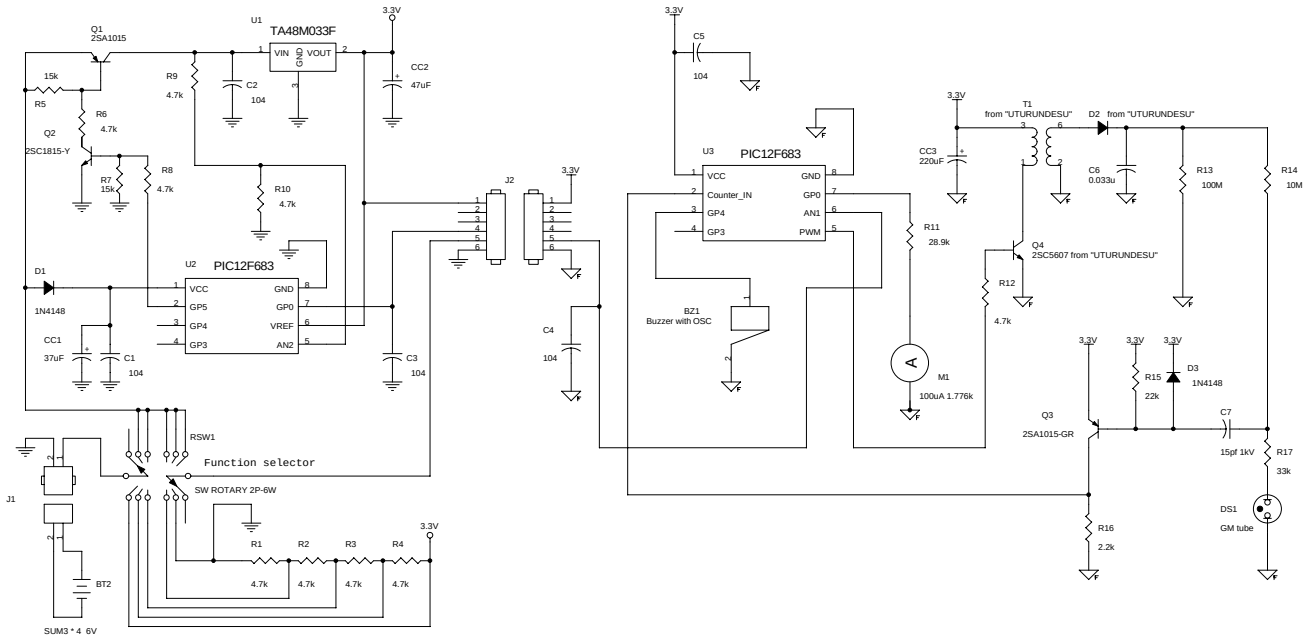

Title	GETGER COUNTER	
Size A3	Document Number ANA-01	Rev 0
Date: Tuesday, May 31, 2011	Sheet 1 of 1	